APPROVED FOR PUBLIC RELEASE

LA--1390
Copy 18 of 67
Series A

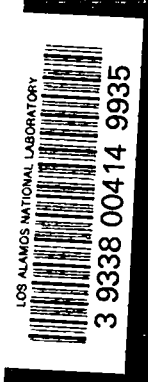

APPROVED FOR PUBLIC RELEASE

APPROVED FOR PUBLIC RELEASE

[redacted]

UNCLASSIFIED

UNCLASSIFIED

LOS ALAMOS SCIENTIFIC LABORATORY

of the

UNIVERSITY OF CALIFORNIA

Report written:
March 3, 1952

PUBLICLY RELEASABLE
Per B. Palatinus FSS-16 Date: 11-8-95
By Marcia Valdez CIC-14 Date: 11-30-95

LA-1390

This document consists of 20 pages

[redacted]

A DETERMINATION OF THE COEFFICIENT OF THERMAL EXPANSION OF ALPHA PLUTONIUM

Classification changed to UNCLASSIFIED
by authority of the U. S. Atomic Energy Commission, Lect #9
Per Jack H. Kahn 4-26-57
By REPORT LIBRARY V. Martinez 5-15-57

Work done by:
R. O. Elliott
R. E. Tate

Report written by:
R. O. Elliott
R. E. Tate

Classification [redacted]
by authority [redacted]
Per [redacted]
By [redacted]ORT LIBRARY [redacted] (11-30-56)

3 9338 00414 9935

TECHNOLOGY -- PLUTONIUM

UNCLASSIFIED

[redacted]

APPROVED FOR PUBLIC RELEASE

APPROVED FOR PUBLIC RELEASE

[redacted] UNCLASSIFIED

TECHNOLOGY -- PLUTONIUM

Distributed: MAY 21 1952

LA-1390

Los Alamos Report Library	1-20
~~J. R. Oppenheimer~~	~~21~~
Argonne National Laboratory	22-25
Atomic Energy Commission, Washington	26-29
Carbide and Carbon Chemicals Company (ORNL)	30-33
Chicago Patent Group	34
Dow Chemical Company (Rocky Flats)	35
duPont Company	36-40
General Electric Company, Richland	41-44
Hanford Operations Office	45
Iowa State College	46
Knolls Atomic Power Laboratory	47-50
Patent Branch, Washington	51
Savannah River Operations Office	52
Technical Information Service, Oak Ridge	53-67

UNCLASSIFIED

[redacted] UNCLASSIFIED

APPROVED FOR PUBLIC RELEASE

APPROVED FOR PUBLIC RELEASE

UNCLASSIFIED

ABSTRACT

The coefficient of linear expansion of alpha plutonium has been determined for the range -180 to +100°C by the silica-tube and dial-indicator method. The value of the expansion coefficient is reported as

$$\alpha = 48.39 \times 10^{-6} + 0.09588 \times 10^{-6}\ t^{\circ}C$$

Included are a detailed description of the apparatus and a discussion of the method.

UNCLASSIFIED

APPROVED FOR PUBLIC RELEASE

APPROVED FOR PUBLIC RELEASE

A DETERMINATION OF THE COEFFICIENT OF THERMAL EXPANSION OF ALPHA PLUTONIUM

INTRODUCTION

The thermal expansion characteristics of plutonium were determined early in the history of the metal, and the data obtained from these investigations were of considerable assistance in establishing the existence and transformation temperatures of the five allotropic forms of plutonium. The coefficients of expansion of the different phases were estimated, and the coefficient of expansion for the alpha phase was noted to be unusually high. It is exceeded only by the values for the alkali metals and several non-metals. Thomas [1] reported a value of $\alpha = 52 \times 10^{-6}/^{o}C$; Martin and Selmanoff [2] reported $60.0 \times 10^{-6}/^{o}C$. These high values for the linear expansion coefficient are typical of plutonium properties which make this metal of special interest in the field of metal physics.

The objects of the experiments to be described were: (1) the determination of a more precise value for the linear expansion coefficient, and (2) the detection of anomalous expansion behavior of plutonium in the temperature range -180 to $+100^{o}C$. If such anomalous behavior were found to occur, it would constitute an experimental observation requiring explanation by any theory of the electronic structure of plutonium.

DILATOMETRIC APPARATUS

General Description

The silica-tube and dial-indicator method, [3] modified for vacuum and inert gases, [4] was used for the measurement of the coefficient of linear thermal expansion of alpha plutonium. Figure 1 illustrates schematically the basic operating principle of this method. A flat silica-glass plug, polished with #600 carborundum, is sealed into the bottom of an outer silica-glass tube and provides a flat, horizontal surface to support the specimen, which is 0.5 in. in diameter and 1.0 in. long. A short molybdenum tube surrounds the specimen and serves to center it. Supported by the specimen is an inner silica tube which extends above the open end of the outer tube and transmits the dilation of the specimen to a dial indicator. The top of the inner tube has a Lucite cap cemented to it. The cap is machined to make a countersunk surface which fits the rounded end of the dial-indicator spindle shaft. When the change in length of the sample is transmitted by the inner silica tube to the dial indicator fastened near the top of the tube, the differential expansion between the specimen and

APPROVED FOR PUBLIC RELEASE

APPROVED FOR PUBLIC RELEASE

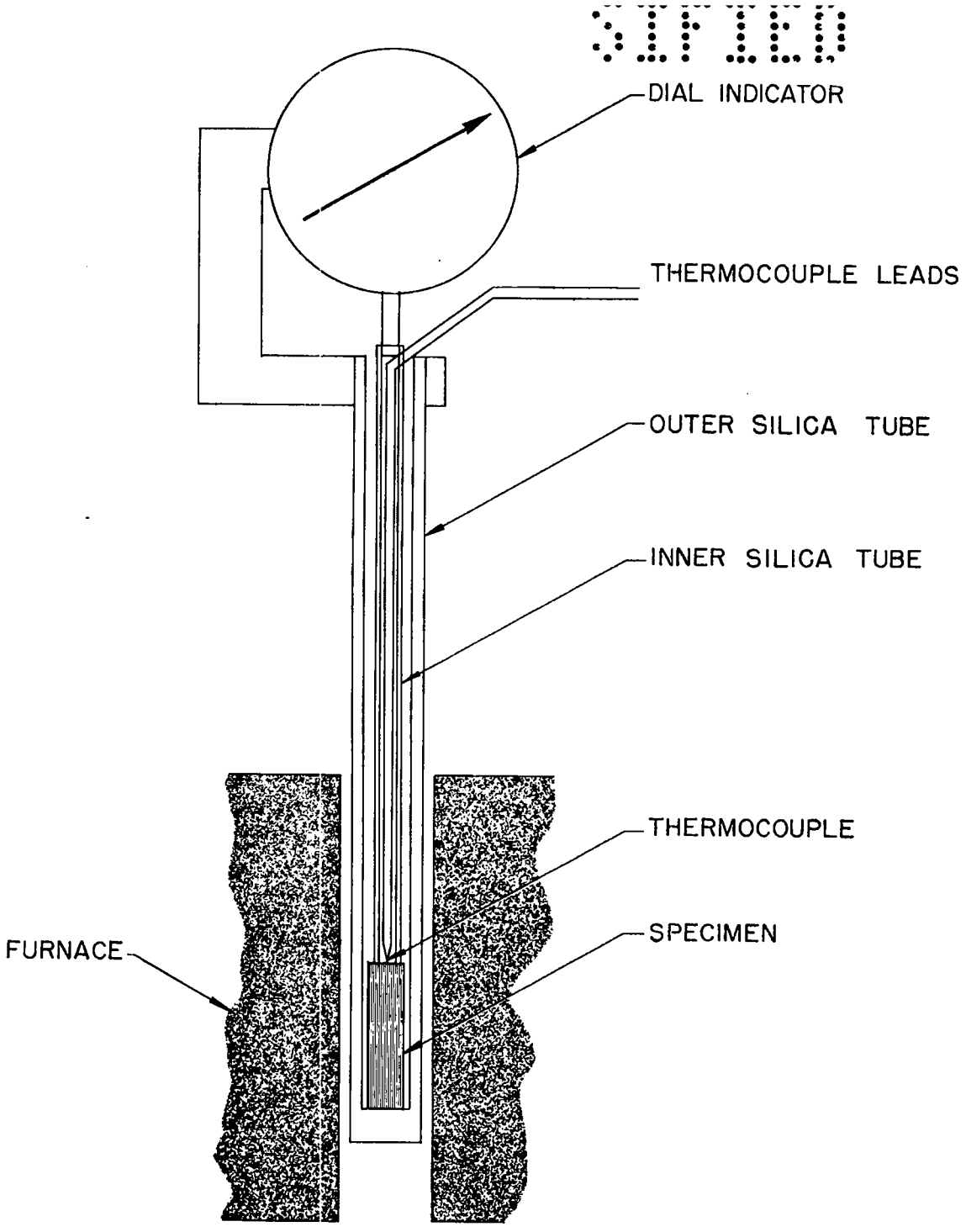

DILATOMETER

Figure 1. Silica-tube and dial-indicator dilatometer.

APPROVED FOR PUBLIC RELEASE

APPROVED FOR PUBLIC RELEASE

an equivalent length of silica glass is registered.

As the specimen is heated, a thermal gradient is established in the silica linkage. Since the outer silica tube is secured at the upper end, it expands downward upon heating. Likewise, the inner silica tube is free to expand downward exactly as much as the outer tube. Thereby, the concentric tubes automatically compensate for expansion in the silica linkage, provided there is no appreciable temperature difference between the two silica tubes, or between the outer silica tube and the specimen, across any plane perpendicular to the longitudinal axis of the tubes. A small correction for the linear expansion of silica glass equivalent to the specimen length was made. Figure 2 is a photograph of the dilatometer and its accessory equipment.

Length Measuring System

A fully jeweled dial indicator with 0.4 in. range of travel and 0.0001 in. graduations, made by the Federal Products Corporation, was used to detect and measure displacement of the inner tube relative to the outer tube. Dial readings were taken to the nearest two-tenths of a division; i.e., 0.00002 in. It was found necessary to vibrate the apparatus immediately prior to each reading in order to prevent sticking of the dial indicator.

The dial indicator was calibrated by comparing with the dial-indicator readings measurements both of the Johannson gage blocks and of a Gaertner precision micrometer slide. A fine screw adjustment on the dial-indicator support post enabled accurate positioning of the indicator so that the most nearly linear portion of its range would always be brought into use. The dial-indicator support post is shown in Figure 3.

The dilatometer (silica-tube assembly) was supported from a circular brass plate. A cement of litharge and glycerine was used to attach the outer tube to a connecting gland which screwed into the bottom of the brass plate. It was felt that use of the cement would eliminate the possibility of creep at this connection.

The length of the dilatometer was such that the specimen was about 13 in. from the brass-plate assembly. Thermostatically controlled cooling water ($25^{o} \pm 1^{o}C$) was circulated through copper coils soldered around the outside of the brass plate. This arrangement was intended to maintain constant temperature of the dial indicator and other metal parts integral with the length measuring system. In addition, the dial-indicator support post and the connecting gland were made of Invar in order to minimize errors due to extraneous thermal gradients.

Temperature Measuring System

Figure 4 illustrates the location and construction of the copper-constantan thermocouple used to measure specimen temperature. The thermocouple was made from a short

APPROVED FOR PUBLIC RELEASE

[redacted]

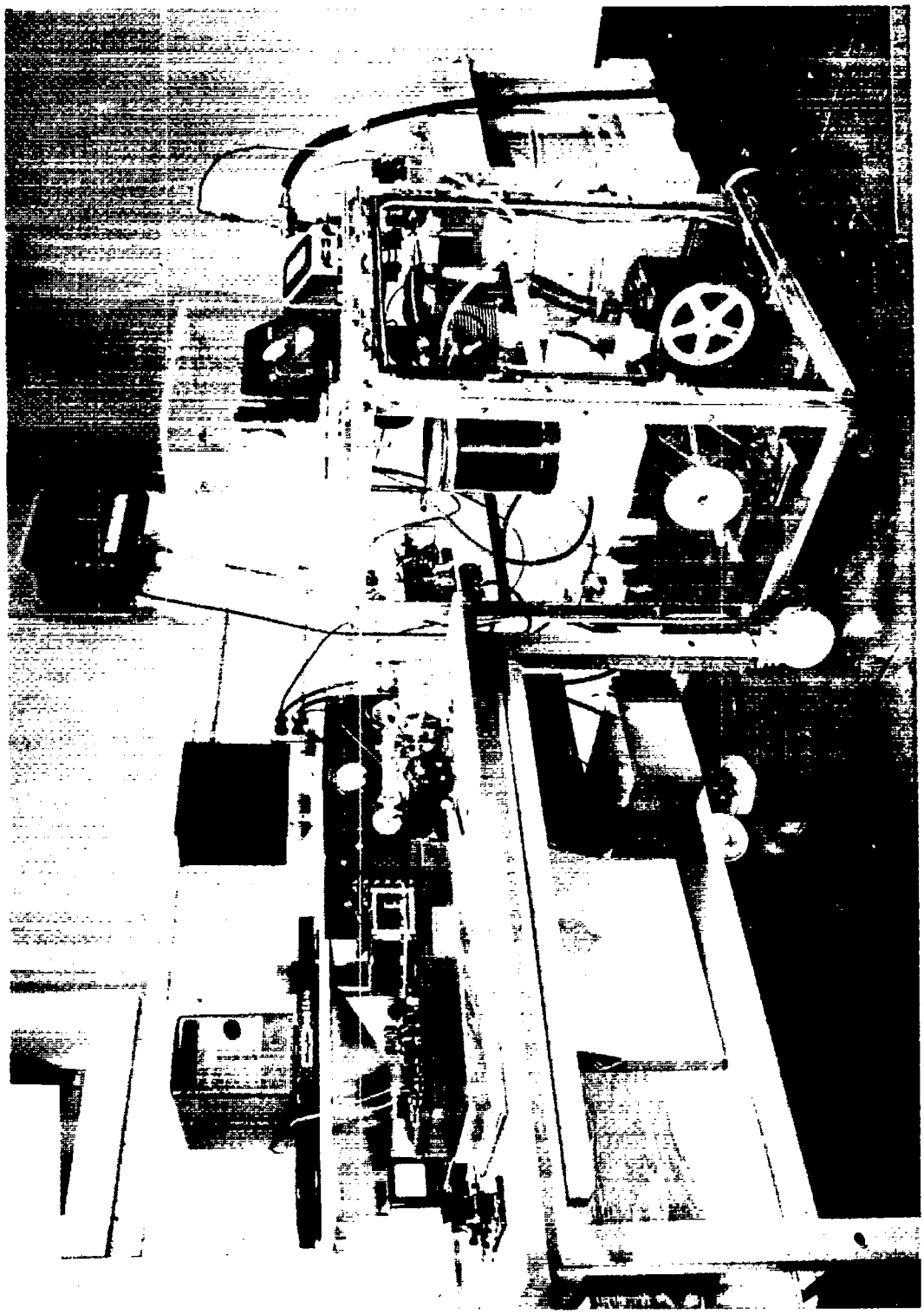

Figure 2. Dilatometer and accessory equipment.

[redacted]

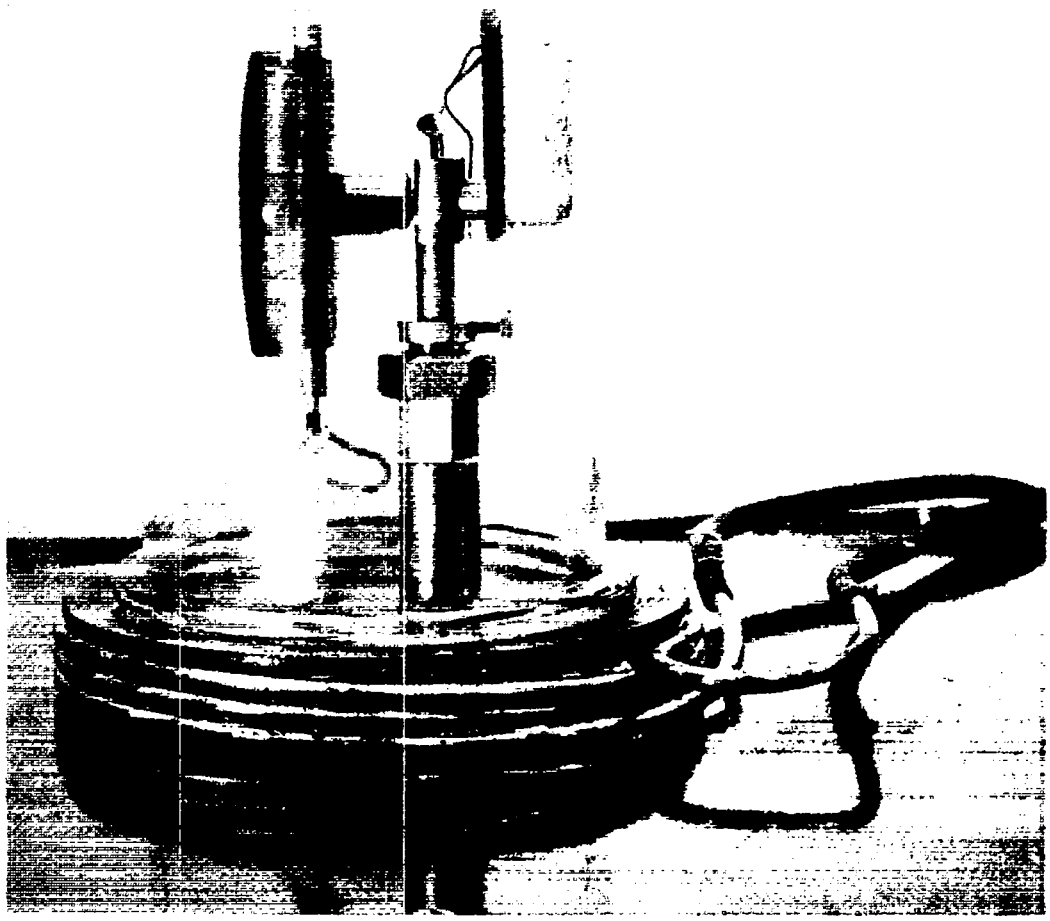

Figure 3. Dial-indicator support post.

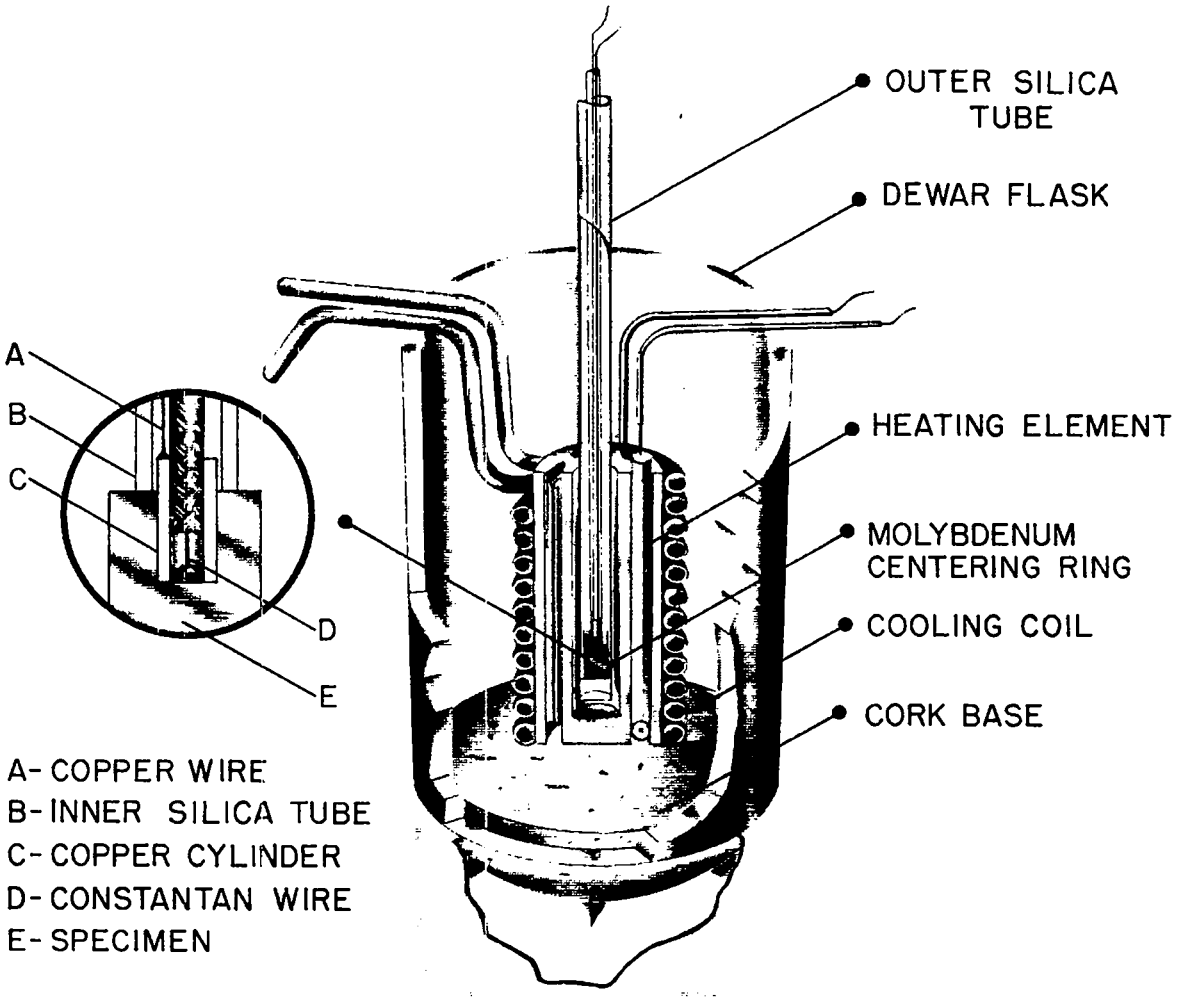

Figure 4. Location of dilatometer specimen.

APPROVED FOR PUBLIC RELEASE

copper cylinder and a constantan wire soft-soldered into the cylinder. This assembly was pressed into a hole in the top of the specimen. A copper wire was soft-soldered to the top of the copper cylinder, and both thermocouple wires were led through the center of the inner tube and brought out at its top through two holes drilled in the Lucite cap. These wires were brought outside the vacuum system through a compression-gland vacuum seal in the brass plate. Covering one wire with Pyrex-fiber sheathing prevented possible short-circuiting inside the inner tube.

The cold junction was constructed as follows: The thermocouple wire and a copper lead wire were mechanically connected and inserted into small glass tubes containing a few drops of mercury. The lead wires were insulated from the thermocouple wires except where they made contact through the mercury. The glass tubes were then inserted into an ice bath and the copper lead wires connected to a Leeds and Northrup type K-2 potentiometer through a double-pole, double-throw, pinch-type, reversing switch.

Wheelco constantan thermocouple wire and soft copper magnet wire (#28 B&S gage) were used to make the copper-constantan thermocouples. The lot of thermocouple wire was calibrated by comparison with a standard copper-constantan thermocouple at the temperatures of the following media: Liquid nitrogen, solid carbon dioxide, ice, and boiling water.

Dilatometer Alignment

Precision-bore silica tubing having an inside diameter of 0.562 ± 0.001 in. was used to make the outer dilatometer tube. A polished, flat plug was sealed into the bottom of this tube with the flat surface normal to the principal axis of the tube. Alignment of this tube relative to the Invar connecting gland during the cementing operation was carefully controlled by using large V-blocks and a surface plate. The tube was cemented in place with its principal axis parallel to that of the gland.

A hole, about 0.060 in. in diameter, which ran the entire length of the inner silica tube, served to align this tube at the lower end, where it fitted over the portion of the copper thermocouple cylinder that extended above the top of the specimen. The upper end of the inner tube was aligned when the countersunk surface of its Lucite cap came into contact with the rounded end of the dial-indicator spindle shaft.

Heating and Cooling Apparatus

The function of the dilatometric heating unit was to heat or cool at constant rates of the order of $1^{\circ}C$/min through the temperature range from -180 to $+100^{\circ}C$ while maintaining uniform temperature throughout the length of the specimen. A uniform temperature was maintained along the specimen length by surrounding the outer silica tube with a copper block 2 in. outside diameter and 8 in. long, contained in a large Dewar flask. The copper

APPROVED FOR PUBLIC RELEASE

APPROVED FOR PUBLIC RELEASE

temperature-equalization block had a 7/8 in. hole running along its principal axis. Silicone oil filled the space between the copper block and the silica tube in order to improve the heat transfer characteristics of the unit.

Heating was accomplished by an electric heating element imbedded in the copper block; and cooling, by a coil of copper tubing, soft-soldered around the block, through which vapor and liquid from a container of liquid nitrogen were passed. It was found that a single current setting would give fairly constant rates of heating of the order of $1^{o}C$/min in the range from -180 to $+100^{o}C$. Constant rates of cooling of the order of $1^{o}C$/min, over the same temperature range, were obtained with a device described by Elliott and Lewis.[5] This device incorporated a timing mechanism and a three-way solenoid valve. Its function was to establish and release intermittently a pressure of helium gas over the liquid nitrogen in a large liquid-nitrogen container. The pressure forced a flow of liquid nitrogen through the coils of the copper block, and when the pressure was released the flow stopped. The large thermal capacity of the copper block insured heating and cooling at a steady, uniform rate.

Vacuum System

The dial gage was enclosed by a small bell jar which was supported by the circular brass plate. A rubber gasket formed a vacuum seal between the bell jar and the plate. The brass plate was connected by means of metal tubing and neoprene vacuum hose to a small VMF-20 vacuum diffusion pump and a mechanical backing pump. Vacua of the order of 10^{-4} to 10^{-5} mm of Hg, as measured by a Phillips ion gage, could be maintained with this system.

Because of the self-heating phenomenon of plutonium, the measurements were made in an inert helium atmosphere of several millimeters of mercury. This was considered necessary to ensure a uniform specimen temperature, constant rates of heating and cooling of the specimen, and no appreciable temperature differences between the two silica tubes in any direction perpendicular to their principal axis.

EXPERIMENTAL PROCEDURE

The dilatometer was checked in all operating details by making two runs in which silver instead of plutonium was used as the specimen. High-purity silver was chosen as a stand-in material because it is isotropic and has a relatively high coefficient of expansion. It was readily available both in suitable form and purity. Its high thermal conductivity ensured a reasonably uniform specimen temperature. A cylindrical specimen, 0.500 in. in diameter and 2.000 in. long, was used. The 2 in. silver stand-in specimen produced

APPROVED FOR PUBLIC RELEASE

APPROVED FOR PUBLIC RELEASE

approximately the same linear displacement as that produced by a 1 in. plutonium specimen.

The plutonium specimen was prepared by casting a cylindrical ingot about 0.5 in. in diameter and 1 in. long. The analysis of the metal from which the ingot was cast (see Appendix I) indicated that the specimen was of reasonably high purity. Experience has shown that ingots do not pick up detectable amounts of impurities during the casting operation. A cylinder, 0.488 in. in diameter and 1.009 in. long, was machined from the ingot. In order to ensure complete transformation to the alpha phase, the cylinder was placed in a die, heated to 325°C, and cooled to room temperature under 50,000 psi of pressure. The dimensions of the specimen were then 0.500 in. in diameter and 0.947 in. long at about 20°C. Measurement of the specimen density by weighing in air and in bromobenzene gave a value of 19.60 gm/cm^3 (see Appendix II). Comparison of this value with the accepted value,[6] 19.8 $\pm$ 0.5 gm/cm^3, shows that the specimen had transformed almost entirely to the alpha phase. A hole 0.073 in. in diameter and 0.2 in. deep was drilled in one end of the specimen, concentric with the cylindrical axis. The thermojunction of the copper-constantan couple was pressed into this hole. The dilatometer was then assembled, evacuated, flushed with helium five times, and finally filled with helium to a pressure of several millimeters of mercury.

A run consisted of heating the specimen from its equilibrium temperature (somewhat higher than room temperature because of the heat generated within the plutonium by radioactive decay) to 94°C, cooling to -180°C, and reheating to the initial temperature. The potentiometer was set at intervals of 0.20 millivolts and the dial indicator was read as the galvanometer in the EMF measuring circuit passed the point of balance. Time readings were also recorded, in order that a check might be made on the constancy of the heating and cooling rates. Rates of 1.0 $\pm$ 0.3°C/min were easily maintained.

Two criteria were used in establishing a good run: (1) The initial and final dial-indicator readings must show that the specimen had returned to its original length. (2) Dial indicator readings at the same temperature on heating and on cooling must not differ by more than 0.0001 in. It was also required that successive runs show substantially the same dial-indicator readings at the same temperature.

EXPERIMENTAL RESULTS

A number of unsuccessful runs were made, and after each run some improvement was made in the construction and instrumentation of the dilatometer. The dilatometer as described in the apparatus section of this report produced successful runs with alpha plutonium.

APPROVED FOR PUBLIC RELEASE

APPROVED FOR PUBLIC RELEASE

The data were obtained in the form of dial indicator readings at various temperatures (see Appendix III).

If L_o is the length of a solid body at 0^oC, then its length at any temperature, t^oC, may be represented by the following equation:

$$L_t = L_o \ (1 + at + bt^2) \tag{1}$$

where a and b are constants depending on the material. For the dilatometer described:

$$L_t = L_o + R - A \tag{2}$$

where R = dial indicator reading at t

A = dial indicator reading at t = 0

If $a = B/L_o$ (3)

$b = C/L_o$ (4)

then $R = A + Bt + Ct^2$ (5)

Equation (5) was fitted by the technique of least squares * to the data obtained from alpha plutonium in the temperature range -180 to $+100^oC$, and the constants a and b were evaluated. A correction had to be made, however, for the length of silica equivalent to the length of the specimen.

Sosman [7] has reported the data of Scheel [8] for the expansion of vitreous silica in the temperature range -190 to $+100^oC$. The equation is

$$L_t = L_o \ (1 + 0.217 \times 10^{-6} t + 0.2379 \times 10^{-8} t^2) \tag{6}$$

Values of a and b for plutonium as determined by the experimental data fitted to Equation (5) are:

$$a = (48.18 \pm 0.01) \times 10^{-6}$$

$$b = (4.57 \pm 0.12) \times 10^{-8}$$

If the values of Equation (6) are adjusted to a specimen length of $L_o = 0.946$ in., then for alpha plutonium over the range -180 to $+100^oC$, $L_t = L_o \left[1 + (48.39 \pm 0.01) \times 10^{-6} t + (0.0479 \pm 0.0012) \times 10^{-6} t^2\right]$. (7)

Differentiation of Equation (7) gives the expression for the instantaneous coefficient of linear expansion referred to 0^oC:

$$\alpha = \left(\frac{1}{L_o}\right) \frac{dl}{dt} = (48.39 \pm 0.01) \times 10^{-6} + (0.0959 \pm 0.002) \times 10^{-6} t \tag{8}$$

Equation (8) has been plotted in Figure 5 and shows that at -180^oC, $\alpha = 31.13 \times 10^{-6}$; at

* A weighted least-squares technique was used. The means of the dial-indicator readings at any temperature were fitted, using as a weighting factor the reciprocal of the variance of the points at each temperature. The standard deviations of the coefficients determined were obtained by the method described by Deming. [9]

APPROVED FOR PUBLIC RELEASE

APPROVED FOR PUBLIC RELEASE

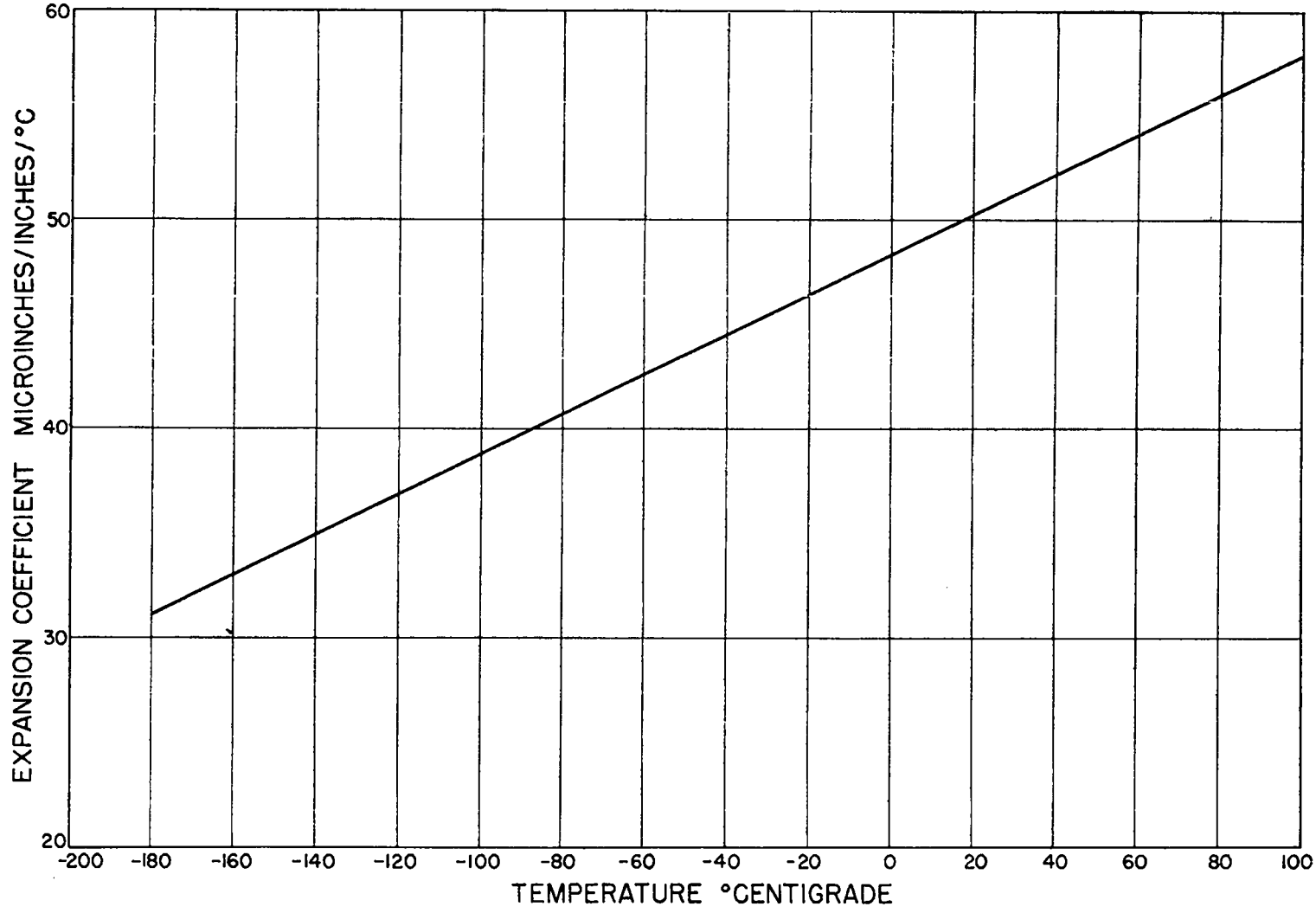

Figure 5. Instantaneous coefficient of linear expansion of alpha plutonium.

APPROVED FOR PUBLIC RELEASE

APPROVED FOR PUBLIC RELEASE

$20^{o}C$, $\alpha = 50.31 \times 10^{-6}$; and at $100^{o}C$, $\alpha = 57.97 \times 10^{-6}$. Other values for α are tabulated in Appendix IV.

DISCUSSION

As initially considered, the determination of the expansion coefficient of alpha plutonium seemed to be a relatively simple and straightforward project. A silica-tube and dial-indicator type of dilatometer, designed for the study of transformation temperatures, was available; and it seemed logical that this apparatus might be quickly modified for determining the expansion coefficient. The first runs, however, did not meet the criteria of a good run as defined earlier in this report. Discrepancies between heating and cooling curves amounted to as much as 0.001 in.; and the initial and final dial-indicator readings differed by as much as 0.0005 in. Successive runs seemed to indicate that the specimen was decreasing in length. Although the initial results did not differ from the final results by a large amount, it was only by successive modifications of the apparatus and technique that the final satisfactory results were achieved.

When it was discovered that constant length measurements could not be maintained by holding the specimen at constant temperature over the period of a day, Invar was substituted for brass in the length measuring system, and an $8^{o}C$ fluctuation in the cooling water was eliminated by using a thermostatically controlled water supply. Pressing the thermojunction into the specimen was an improvement over the previous method of peening the junction into a molybdenum cap at the top of the specimen. In order to eliminate the possibility of creep where the silica tube was cemented into the connecting gland, a cement of litharge and glycerine was substituted for deKhotinsky cement.

Some of the initial difficulties may have resulted from heating the plutonium specimen to above $125^{o}C$ and thereby causing incipient transformation to the beta phase. In later runs, after the specimen was cooled from $325^{o}C$ to room temperature under pressure, precautions were taken to ensure that it was not subsequently heated to a temperature greater than $100^{o}C$. Also, it is quite possible that a number of cycles of heating and cooling between -180 and $+100^{o}C$ were required to eliminate the last traces of the beta phase. There is evidence that the alpha phase of plutonium is anisotropic and that the effect of the anisotropy on the expansion coefficient is unknown.

APPROVED FOR PUBLIC RELEASE

APPROVED FOR PUBLIC RELEASE

[redacted]

SUMMARY

The coefficient of linear expansion of alpha plutonium has been reported for the temperature range -180 to +100°C. A least-squares fit of the experimental data gives the expression, $\alpha = 48.39 \times 10^{-6} + 0.09588 \times 10^{-6} t^{\circ}C$. Descriptions of the apparatus and method are given in considerable detail, and a discussion of the difficulties encountered in the experimental work is included.

REFERENCES

1. A. E. Martin and G. D. Selmanoff, "Dilatometric Studies of the Allotropic Transformations of Plutonium," LA-502. August, 1947.
2. C. A. Thomas, "The Chemistry, Purification and Metallurgy of Plutonium," MUC-JCW-223, p. 385. December, 1944.
3. W. Souder and P. Hidnert, "Thermal Expansions of Solids," Bur. Standards Circular 486 (1950).
4. F. M. Walters, Jr. and M. Gensamer, "Alloys of Iron, Manganese and Carbon -- Part IV," Trans. Am. So. Steel Treating, 19, 608 (1932).
5. N. Elliott and W. B. Lewis, "Magnetic Susceptibilities of Some Pu (IV) Salts," LA Report in preparation.
6. C. A. Thomas, op. cit., p 382.
7. R. B. Sosman, "The Properties of Silica," The Chemical Catalog Company, New York, 1927, p. 405.
8. K. Scheel, Zeit. Physik, 5, 167-172 (1921).
9. W. E. Deming, "Statistical Adjustment of Data," John Wiley and Sons, New York, 1946, p. 167.

[redacted]

APPROVED FOR PUBLIC RELEASE

APPROVED FOR PUBLIC RELEASE

[redacted] [redacted]

SECRET

APPENDIX I

Chemical Analysis of Plutonium Melting Stock RJ 1213

Element	PPM	Method of Analysis
Carbon	270	Combustion
Iron	680	Colorimetric
Lithium	<0.2	Spectrochemical
Beryllium	<0.2	Spectrochemical
Boron	0.5	Spectrochemical
Sodium	<5	Spectrochemical
Magnesium	<5	Spectrochemical
Aluminum	30	Spectrochemical
Silicon	10	Spectrochemical
Calcium	<5	Spectrochemical
Vanadium	<20	Spectrochemical
Chromium	30	Spectrochemical
Manganese	10	Spectrochemical
Cobalt	<0.1	Spectrochemical
Nickel	50	Spectrochemical
Copper	5	Spectrochemical
Silver	<1	Spectrochemical
Cadmium	<10	Spectrochemical
Tin	<1	Spectrochemical
Lanthanum	<10	Spectrochemical
Lead	1	Spectrochemical
Bismith	<20	Spectrochemical

[redacted] [redacted]

SECRET

APPROVED FOR PUBLIC RELEASE

APPROVED FOR PUBLIC RELEASE

[redacted]

APPENDIX II

Density of Specimen Number 647

Composition: Plutonium melting stock RJ 1213

Condition: Cooled from 325°C under 50,000 psi

Weight of specimen in air	59.5979 gm
Weight of suspension and specimen in bromobenzene	55.5366 gm
Weight of suspension in bromobenzene	0.4498 gm
Weight of specimen in bromobenzene	55.0868 gm
Weight of bromobenzene displaced	4.5111 gm
Density of bromobenzene at 26.8°C	1.48393 gm/cm^3
Volume of bromobenzene displaced	3.0400 cm^3
Density of specimen number 647	19.60 gm/cm^3

Density Calculated from Dimensions of Specimen at Approximately 20°C

Diameter of specimen	0.500 in.
Length of specimen	0.947 in.
$(0.500)^2\ (0.947)\ (16.39)\frac{\pi}{4} =$	3.0469 cm^3
$\frac{59.5979}{3.0469} =$	19.56 gm/cm^3

[redacted]

APPROVED FOR PUBLIC RELEASE

APPROVED FOR PUBLIC RELEASE

[redacted]

APPENDIX III

Dial-Indicator Readings at t°C

Thermocouple EMF (millivolts)	Temperature °C	Dial-Indicator Readings, (in.) Heating 1	Cooling 1	Heating 2	Cooling 2	
4.0	94.0	0.15075	0.15078	0.15066	0.15067	
3.8	89.8	0.15052	0.15053	0.15042	0.15043	
3.6	85.4	0.15027	-	0.15019	0.15020	
3.4	81.0	0.15001	0.15005	0.14994	0.14997	
3.2	76.5	0.14977	0.14980	0.14968	0.14971	
3.0	72.0	0.14951	0.14954	0.14945	0.14947	
2.8	67.5	0.14928	0.14931	0.14920	0.14923	
2.6	63.0	0.14903	0.14908	0.14896	0.14900	
2.4	58.5	0.14880	0.14884	0.14871	0.14875	
2.2	53.8	0.14856	0.14861	0.14848	0.14851	
2.0	49.3	0.14832	0.14837	0.14824	0.14827	
1.8	44.5	0.14810	0.14814	0.14800	0.14803	
1.6*	39.8	0.14785	0.14790	0.14777	0.14780	
1.4	35.0	0.14765	0.14767	0.14759	0.14757	
1.2	30.2	0.14740	0.14742	0.14736	0.14733	
1.0	25.3	0.14719	0.14720	0.14712	0.14711	
0.8	20.3	0.14695	0.14698	0.14690	0.14689 ✓	.14693
0.6	15.3	0.14672	0.14675	0.14668	0.14667	
0.4	10.3	0.14649	0.14652	0.14643	0.14642	
0.2	5.3	0.14625	-	0.14620	0.14620	
0.0	0.0	0.14602	0.14608	0.14598	0.14598	.14605
0.2	- 5.3	0.14579	0.14587	0.14572	0.14574	
0.4	- 10.5	0.14553	0.14563	0.14550	0.14550	
0.6	- 16.0	0.14532	0.14540	0.14528	0.14528	
0.8	- 21.3	0.14510	0.14516	0.14503	0.14505	
1.0	- 26.8	0.14488	0.14492	0.14480	0.14481	
1.2	- 32.3	0.14464	0.14469	0.14458	0.14458	
1.4	- 38.0	0.14440	0.14445	0.14432	0.14434	
1.6	- 44.0	0.14418	0.14420	0.14411	0.14412	
1.8	- 49.8	0.14393	0.14398	0.14388	0.14389	
2.0	- 55.8	0.14368	0.14366	0.14362	0.14363	
2.2	- 62.0	0.14341	0.14333	0.14340	0.14338	
2.4	- 68.3	0.14303	0.14313	0.14300	0.14310	
2.6	- 74.7	0.14272	0.14288	0.14272	0.14285	
2.8	- 81.0	0.14249	0.14260	0.14249	0.14262	
3.0	- 87.7	-	0.14233	0.14222	0.14234	
3.2	- 94.7	0.14202	0.14208	0.14200	0.14210	
3.4	-101.7	0.14177	0.14178	0.14174	0.14182	
3.6	-109.0	0.14151	0.14152	0.14149	0.14155	
3.8	-116.7	0.14128	0.14129	0.14122	0.14128	
4.0	-124.5	0.14100	0.14102	0.14097	0.14099	
4.2	-132.5	0.14073	0.14072	0.14070	0.14070	
4.4	-141.0	0.14048	0.14042	0.14041	0.14041	
4.6	-150.0	0.14020	0.14019	0.14014	0.14014	
4.8	-159.3	0.13990	0.13982	0.13983	0.13982	
5.0	-169.0	0.13960	0.13942	0.13955	0.13950	
5.2	-180.0	0.13930	0.13918	0.13925	0.13915	.13922

* Initial Temperature

[redacted]

APPROVED FOR PUBLIC RELEASE

APPROVED FOR PUBLIC RELEASE

[redacted]

APPENDIX IV

Instantaneous Values of the Coefficient* of Linear Expansion for Alpha Plutonium

Temp. (°C)	Alpha (micro-inches/inch)	Temp. (°C)	Alpha (micro-inches/inch)	Temp. (°C)	Alpha (micro-inches/inch)
100	57.97	0	48.39	-100	38.80
90	57.02	- 10	47.43	-110	37.84
80	56.06	- 20	46.47	-120	36.88
70	55.10	- 30	45.51	-130	35.93
60	54.14	- 40	44.56	-140	34.97
50	53.18	- 50	43.60	-150	34.01
40	52.23	- 60	42.64	-160	33.05
30	51.27	- 70	41.68	-170	32.09
20	50.31	- 80	40.72	-180	31.13
10	49.35	- 90	39.76		
0	48.39	-100	38.80		

* Reference temperature is 0°C.

[redacted]

APPROVED FOR PUBLIC RELEASE

APPROVED FOR PUBLIC RELEASE

REPORT LIBRARY
REC. FROM GA
DATE 9/15/52
RECEIPT ~

APPROVED FOR PUBLIC RELEASE